Reg. No. | | | | | | | | | |

M.E. / M.TECH. DEGREE EXAMINATIONS, MAY/JUNE 2017
FIRST SEMESTER

COMPUTER AIDED DESIGN
CD16101 – ADVANCED MECHANICS OF MATERIALS

(Regulation 2016)

Q. Code: 562336

Time: Three Hours **Maximum : 100 Marks**

Answer **ALL** questions

PART A - (10 X 2 = 20 Marks)

1. State the generalized Hooke's law.
2. State St.Venant's principle.
3. Define Shear Center.
4. List the situations for unsymmetric bending occurs in beams.
5. State the conditions of curved beam and straight beam theory.
6. State the theory applicable to torsion of non-circular sections.
7. What is prevented or un-uniform torsion?
8. Where do you use membrane analogy?
9. List the factors affecting maximum contact pressure between two curved surfaces.
10. What are Hertz contact stresses.

PART B - (5 X16 = 80 Marks)

11. (a) (i) State and prove the usefulness of Airy's stress function. **(16)**

(i) Discuss the properties of viscoelastic materials.

(OR)

(b) Consider the stress state of a point is given by the matrix: **(16)**

$$[\sigma_{ij}] = \begin{bmatrix} 0 & -75 & -55 \\ -75 & 0 & 65 \\ -55 & 65 & 0 \end{bmatrix} \text{MPa}$$

Find the principal stresses, the direction cosines for the three principal stress directions, and the maximum shearing stress.

12. (a) A shear force, V of 1600 N, acts downward on a beam with T-section for gluing the top portion (200 mm x 50 mm) to the bottom portion (50 mm x 200 mm) as shown below. Find the shear stress and its distribution in the glue. **(16)**

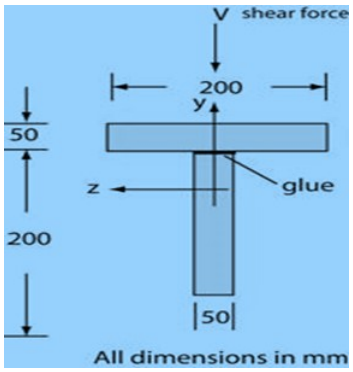

(OR)

(b) A cantilever beam of rectangular cross section is subjected to an inclined load P along one of its diagonals at the free end of the beam as shown in figure below. Prove that the neutral axis is along the other diagonal. **(16)**

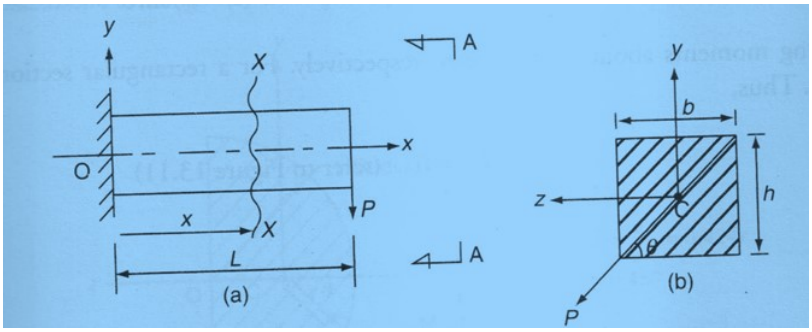

13. (a) For the crane hook shown in figure below, the cross-section is circular with 50 mm diameter. The radius of the curved hook is r = 75 mm. The maximum allowable tensile stress at section 'A-A' is 375 MPa. Calculate the safe load P that can be applied on to the hook. **(16)**

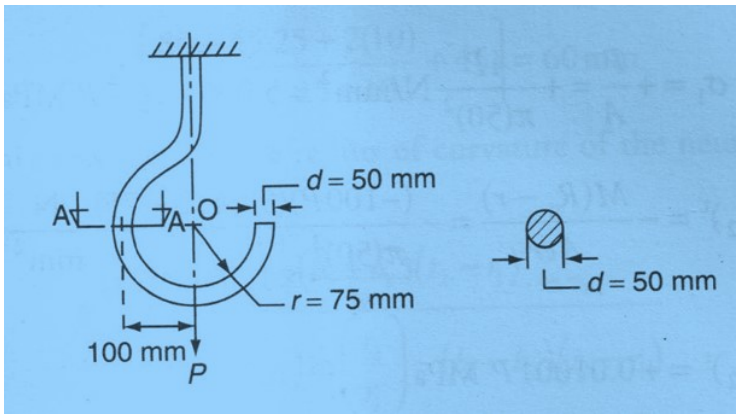

(OR)

(b) The curved portion of the bar is loaded as shown in the figure below. If the maximum allowable stress in the bar is 150 MPa. Calculate the distance 'a'. **(16)**

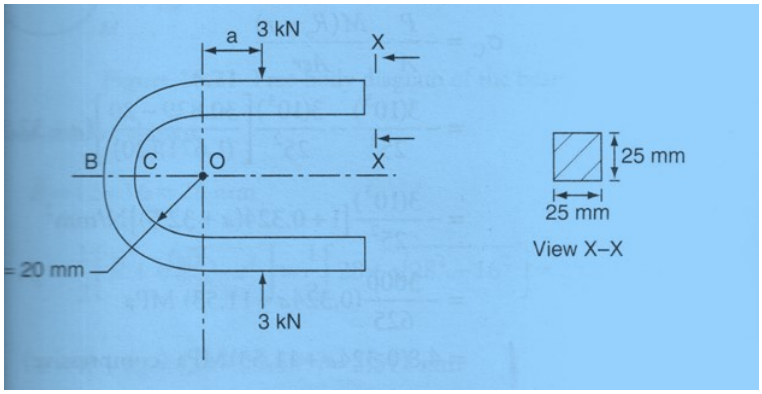

14. (a) An aluminum tube, 1.2 m long has the semi-circular cross section shown in the figure below. If stress concentrations at the corners are neglected, determine **(16)**

i) The torque that causes a maximum shear stress of 40 MPa.

ii) The corresponding angle of twist of the tube Use G = 28 GPa for aluminum.

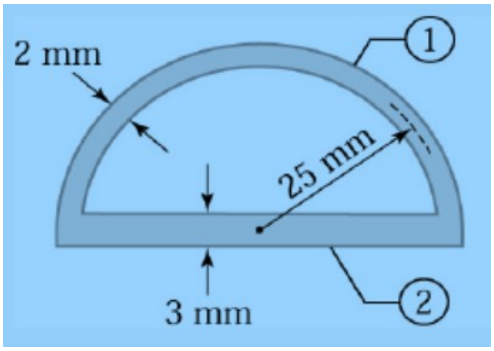

(OR)

(b) Derive expressions for calculating tensional stresses for a narrow rectangular cross sections. **(16)**

15. (a) Calculate the ratio of wall thickness to the inner diameter of a thick steel tube subjected to the internal pressure only, if the ratio of the internal pressure to the maximum circumferential stress is 0.5. If the tube has 250 mm inside diameter, calculate the change in thickness, when the internal pressure is 80 MPa. Assume for steel E = 200 GPa, and $\gamma = 0.3$. **(16)**

(OR)

(b) Discuss the importance and applications of contact stresses in engineering design. **(16)**