Registration No. | | | | | | | | | |

B.E./B.Tech. Degree Examinations, December 2016

First Semester

GE16152 – ENGINEERING GRAPHICS

(Common to All Branches)

(Regulation 2016)

QP Code:736258

Time: Three hours **Maximum : 100 marks**

Answer **ALL** Questions

(5 × 20 = 100 Marks)

1. (a) Draw the locus of a point which moves in such a manner, that its distance from a fixed point is equal to the distance from the fixed straight line. The distance between the fixed point and the fixed line is 50 mm. Name the curve and draw the tangent and normal on the curve at a point 40 mm above the axis. (20)

(OR)

(b) Draw by free hand, the front, top and suitable side view of the object shown below. (20)

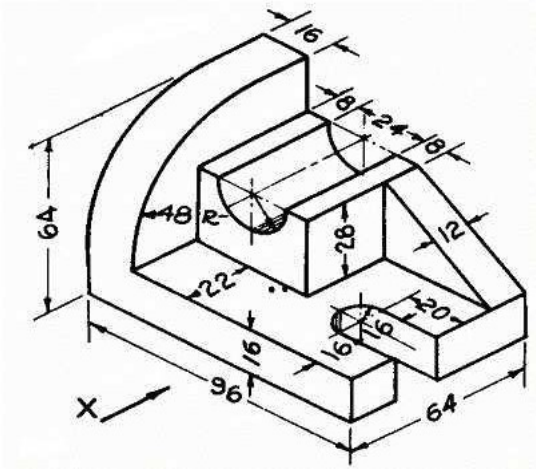

2. (a) (i) Point A is 30 mm infront of the VP and 25 mm below the HP. Draw its projections. (2)

(ii) Point B is 35 mm above the HP and on the VP. Draw its projections. (2)

(iii) The end P of a line PQ, 70 mm long is 15 mm above the HP and 20 mm infront of the VP. The other end Q is 50 mm above HP. Its plan is inclined at 45° to the VP. Draw the projections of the line and find its true inclinations with the VP and the HP. (16)

(OR)

(b) A square lamina PQRS of side 40 mm rests on the ground on its corner P in such a way that the diagonal PR is inclined at 45° to HP and also apparently inclined at 30° to VP. Draw its projections. (20)

3. (a) A hexagonal prism of base side 25 mm and axis length 50 mm rests on the ground on one of the edges of the base and the axis inclined at 35° to the reference plane on which its rests. Draw its projections when the axis is parallel to the VP. (20)

(OR)

(b) A square pyramid of base side 40 mm and axis 70 mm long has one of its triangular faces on VP and the edge of the base contained by that face is perpendicular to HP. Draw its projections. (20)

4. (a) A Hexagonal pyramid of base side 35 mm and axis 65 mm rests on HP on its base with two edges parallel to VP. It is cut by a vertical plane inclined at 30° to VP and cutting the pyramid at a distance of 6 mm away from the plan of the axis. Draw the top view, sectional front view and true shape of the section. (20)

(OR)

(b) A cone of base 60 mm and height 70 mm is resting with its base on HP. An insect starts from a point on the circumference of the base, goes round the solid and reaches the starting point in the shortest path. Find the distance travelled by the insect and also the projections of the path followed by it. (20)

5. (a) A frustum of cone of base diameter 40 mm, top face diameter 20 mm and the height of the frustum is 45 mm is placed centrally over a hexagonal prism of base side 36 mm and axis 25 mm long. The axes of the two solids are collinear. Draw the isometric view of the combined solid when the base side of the hexagonal prism is perpendicular to VP. (20)

(OR)

(b) A rectangular pyramid of base 30 x 20 mm and height 40 mm rests with its base on the ground such that one of the longer base edges is parallel to the picture plane and 5 mm infront of it. The observer is 50 mm infront of the PP, 25 mm to the left of the axis of the pyramid, and 50 mm above the ground. Draw the perspective view of the pyramid. (20)