Q. Code: 427690

Reg. No. | | | | | | | | | |

B.E. / B.TECH. DEGREE EXAMINATIONS, DEC 2019

Fourth Semester

CE16401 – STRENGTH OF MATERIALS-II

(Civil Engineering)

(Regulation 2016)

Time: Three Hours **Maximum : 100 Marks**

Answer **ALL** questions

PART A - (10 X 2 = 20 Marks)

		CO	RBT
1.	Define the term strain energy.	1	R
2.	Write down the expression for strain energy stored in a bar of cross sectional area 'A' and length 'l' subjected to a tensile load 'W'.	1	R
3.	Write the end moments for the fixed beam subjected to an eccentric point load 'W'.	2	R
4.	What are the advantages and limitations of theorem of three moments?	2	R
5.	Write the parameters influencing buckling load of a long column.	3	U
6.	Write Lame's equations for stresses in thick cylinder.	3	R
7.	Define stress tensor at a point.	4	R
8.	What are the various theories of failure?	4	R
9.	Distinguish between symmetrical and unsymmetrical section of beams.	5	U
10.	What is the most suitable section for a crane hook and write the nature of stress in the inside section of a crane hook?	5	U

PART B - (5 X16 = 80 Marks)

11. (a) Find the vertical deflection of the free end C of the truss shown in figure. E=2×10^5 MPa. Cross sectional area of each member is 8 cm^2. **(16)** 1 AN

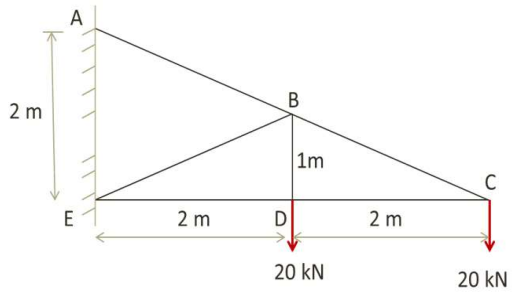

(OR)

	(b)	Find the slope at the centre of a cantilever beam subjected to u.d.l. of w kN/m for the whole span using energy principle.	**(16)**	**1**	**AN**
12.	(a)	A two span continuous beam ABC is fixed at the left end A and placed over simple supports at B and C such that AB=12 m and BC=10 m. It carries a concentrated load of 20 kN at 4 m from the end A. In addition, the beam carries a uniformly distributed load of 2kN/m over BC. Assuming uniform section throughout, analyse the beam and sketch the shear force and B.M.diagrams.	**(16)**	**2**	**AN**
		(OR)			
	(b)	A beam AB of 12m span has fixed ends. It carries a downward load of 120 kN at 4 m from end A and an upward load of 80 kN at 6 m from end B. Calculate the fixed end moments and draw the bending moment diagram.	**(16)**	**2**	**AN**
13.	(a)	From the following data, determine thickness of cast-iron column: Length of column = 6 m, External diameter = 200 mm, Load=500 kN and Factor of safety = 6. Assume fixed ends and ultimate compressive stress and constant for hinged ends as 570 MN/m^2 and 1/1600 respectively.	**(16)**	**3**	**AP**
		(OR)			
	(b)	A pipe with internal diameter 400 mm is to carry a fluid pressure of 12 MPa. If the maximum stress in the material of the pipe is restricted to 110 MPa, calculate the minimum thickness of the pipe required. Draw pressure and stress distribution diagram across the section.	**(16)**	**3**	**AP**
14.	(a)	The rectangular stress components of a point in three dimensional stress system are defined as σ_x=20 MPa; σ_y=-40 MPa; σ_z=80 MPa; τ_{xy}=40 MPa; τ_{yz}=-60 MPa and τ_{zx}=20 MPa. Determine the principal stresses and principal planes. Find also the maximum shear stress.	**(16)**	**4**	**AP**
		(OR)			
	(b)	In a steel member, at a point, the major principal stress is 180 MN/m^2 and the minor principal stress is compressive. If the tensile yield	**(16)**	**4**	**AP**

point of the steel is 225 MN/m^2; find the value of minor principal stress at which yielding will commence, according to each of the following criteria of failure.

(i) Maximum shear stress

(ii) Maximum total strain energy and

(iii) Maximum shear strain energy .Take Poisson's ratio=0.26

15. (a) A Cantilever of I-section, 2.4 m long is subjected to a load of 200 N at the free end as shown in Figure. Determine the resulting bending stress at corners A and B, on the fixed section of the cantilevers. **(16)** **5** **AP**

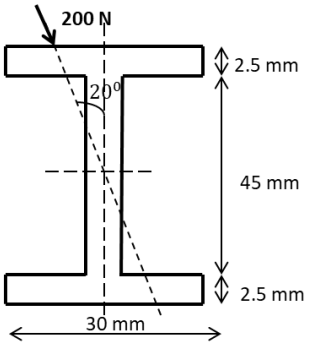

(OR)

(b) Figure shows a circular ring of rectangular section, with a slit and subjected to load P. (i) Calculate the magnitude of the force P if the maximum stress along the section 1-2 is not to exceed 225 MN/m^2. (ii) Draw the stress distribution along 1-2. **(16)** **5** **AP**