Q. Code: 156029

Reg. No. | | | | | | | | | |

B.E. / B.TECH. DEGREE EXAMINATIONS, DEC 2019

Seventh Semester

ME16006 – PROCESS PLANNING AND COST ESTIMATION

(Mechanical Engineering)

(Regulation 2016)

Time: Three Hours **Maximum : 100 Marks**

Answer **ALL** questions

PART A - (10 X 2 = 20 Marks)

		CO	RBT
1.	What do you understand by Process planning?	4	U
2.	How the manufacturing processes are classified? List them.	4	U
3.	Define the term cutting speed and feed rate as applied to lathe operations?	4	U
4.	Why jigs and fixtures are known as productive tools?	4	AP
5.	What is meant by overhead cost? How the overhead costs are allocated to a product?	1	AP
6.	Why cost estimation is being done by Engineers and not by accountants? Justify.	1	AP
7.	How the material cost is calculated in forging industries?	2	AP
8.	List down the prime cost involved in cast products?	2	AP
9.	How will you calculate the time required for drilling a hole in an object?	3	U
10.	How the machining time is calculated for turning operation in a lathe?	3	U

PART B - (5 X16 = 80 Marks)

11.	(a)	(i)	Briefly explain the steps involved in Drawing Interpretations?	(8)	4	U
		(ii)	What factors are taken into consideration in Material Selection?	(8)	4	U
			(OR)			
	(b)	(i)	What are all the set of documents required by a process planning Engineer to develop the process planning activity for manufacturing a part? Explain.	(8)	4	U
		(ii)	List and explain the factors which govern the selection of a manufacturing process.	(8)	4	U
12.	(a)	(i)	How machining time is calculated in a shaping machine? Explain with certain nomenclature.	(8)	4	AP

(ii) Estimate the milling time to cut 60 teeth on a gear blank 60 mm thick; feed 35 mm/min and take overall set up time as 10 minutes. **(8)** **4** **AP**

(OR)

(b) (i) Briefly explain the principles of location while designing a jig or a fixture? **(8)** **4** **AP**

(ii) For what kind of production, Jigs and Fixtures can be used? Justify. **(4)** **4** **AP**

(iii) Differentiate between Jigs and Fixtures? **(4)** **4** **AP**

13. (a) (i) From the following data for a connecting rod manufacturer, prepare a statement showing prime cost, Works/factory cost, production cost, total cost and profit. **(12)** **1** **AP**

Value of stock of material as on 1-04-2003	25,000
Material purchased	2,75,000
Wages to labour	1,20,000
Depreciation of plant and machinery	8,000
Depreciation of office equipment	2,000
Rent, taxes and insurance of factory	16,000
General administrative expenses	3,400
Water, power and telephone bills of factory	9,600
Water, lighting and telephone bills of office	2,500
Material transportation in factory	2,000
Insurance and rent of office building	2,000
Direct expenses	5,000
Commission and pay of salesman	10,500
Repair and maintenance of plant	1,000
Works Manager salary	30,000
Salary of office staff	60,000
Value of stock of material as on 31-03-2004	36,000
Sale of products	7,00,000

(ii) A certain piece of work is produced by a firm in batches of 100. The direct materials cost for that 100 piecework is Rs. 160 and the direct labour cost is Rs. 200. Factory on cost is 35% of the **(4)** **1** **AP**

total material and labour cost. Overhead charges are 20% of the factory cost. Calculate the prime cost and factory cost. If the management wants to make a profit of 10% on the gross cost, determine the selling price of each article.

(OR)

(b) (i) A component can be conveniently manufactured either on an ordinary centre lathe or on an automatic lathe machine. Each machine has a working life of 20,000 hours. The following data is available: **(10) 1 AP**

Item of expenditure	*Ordinary Centre*	*Lathe Automatic m/c*
Initial cost	Rs. 75,000	Rs. 1,40,000
Tooling cost	Rs. 600	Rs. 7,500
Material cost/piece	Rs. 2.00	Rs. 2.00
Labour cost/hour	Rs. 10.00	Rs. 18.00
Cycle time/piece	6 min	1 min
Setting up labour cost	Rs. 40	Rs. 70
Machine overheads/hours	Rs. 40	Rs. 60
Salvage value after 20,000 hours	Rs. 15,000	Rs. 20,000

Calculate the quantity at break-even point.

(ii) Calculate the selling price of a product from the following data : **(6) 1 AP**

Direct material cost per component	Rs. 16
Direct labour cost per component	Rs. 12
Total direct material cost during one year	Rs. 48,000
Total overheads of the factory	Rs. 12,000
Profit	25 percent on total cost

The overheads are to be allocated on the basis of percentage on direct material cost.

14. (a) (i) 150 pieces of shafts as shown in Fig. 1 are to be drop forged from the raw stock of 2 cm diameter. Estimate the cost incurred assuming that material cost = Rs. 5.20 per metre. Cost of forging = Rs. 120.50 per sq. meter of surface area to be forged. Overhead expenses to be 100% of the cost of the forging. Consider all losses. **(10) 2 AP**

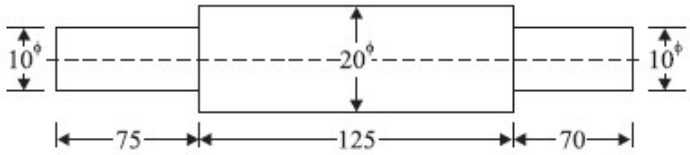

Fig.1 (All Dimensions are in millimetre)

(ii) Calculate the Material cost alone for the CI (Cast Iron) cap shown in Fig. 2, from the following data : **(6) 2 AP**

Cost of molten iron at cupola spout = Rs. 30 per kg

Process scrap = 17 percent of net wt. of casting

Process scrap return value = Rs. 5 per kg

Density of material used = 7.2 gms/cc

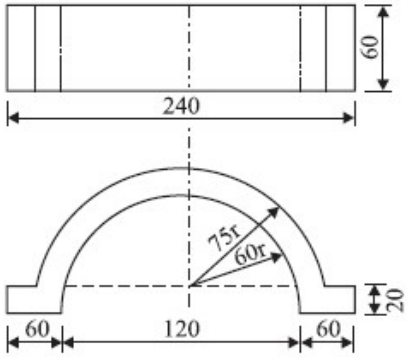

Fig. 2. (All Dimensions are in Millimeter)

(OR)

(b) Calculate the cost of welding two pieces of mild steel sheets 1 meter long and 7 mm thick. A 60° V is prepared by means of gas cutting before welding is to the commenced. The cost of Oxygen is Rs. 7/cu meter and of acetylene is Rs. 4/cu meter. The filler metal costs Rs. 20 per kg. The following data is also available: **(16) 2 AP**

For gas cutting (For 10 mm thick plate)

Cutting speed = 20 m/hr

Consumption of Oxygen = 2 cu meter/hr

Consumption of acetylene = 0.2 cu meter/hr

Data for Rightward Welding (For 7 mm thick plate)

Consumption of Oxygen = 0.8 cu meter/hr

Consumption of acetylene = 0.8 cu meter/hr

Diameter of filler rod used = 3.5 mm

Filler rod used per meter of weld = 3.4 meters

Rate of welding = 3 meters/hr

Density of filler metal = 8 gm/cc

15. (a) (i) Find the time required to manufacture the tapered cylindrical job of dimensions; minor diameter 30 mm, major diameter 80 mm and length 120 mm from a given round bar of 80 mm diameter and 120 mm length. Assume : **(6) 3 AP**

Cutting speed = 75 m/min.

Max. feed by compound rest = 0.05 mm/rev

Depth of cut should not exceed 4 mm.

(ii) A m.s. bar of 40 mm diameter is to be turned as shown in the Fig. 4 **(10) 3 AP**

Estimate the total time to accomplish the task.

Assume Cutting speed = 25 m/min

Feed rate = 0.2 mm/rev.

Mounting and setting time = 40 seconds/component

Allowances = 30 percent of unit production time.

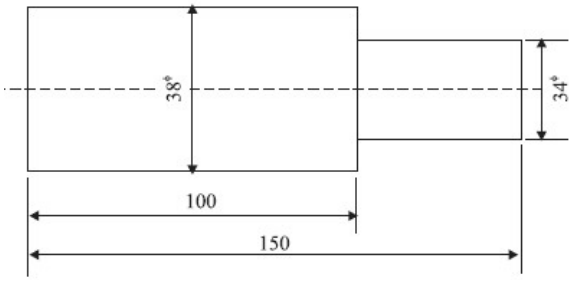

Fig. 4 (All Dimensions are in millimeter)

(OR)

(b) (i) Estimate the time taken to drill a 25 mm diameter × 10 cm deep hole in a casting. First a 10 mm diameter drill is used and then the hole is enlarged by a 25 mm diameter drill. Assume: **(8) 3 AP**

Cutting speed = 15 m/min.

Feed for f 10 mm drill = 0.22 mm/rev.

Feed for f 25 mm drill = 0.35 mm/rev.

(ii) A 300 mm × 50 mm rectangular cast iron piece is to be face milled with a carbide cutter. The cutting speed and feed are 50 m/min and 50 mm/min. If the cutter dia is 80 mm and it has 12 cutting teeth, determine: **(8) 3 AP**

(*i*) Cutter r.p.m.

(*ii*) Feed per tooth

(*iii*) Milling time