B.E./B.TECH. Degree Examination, December 2020

Third Semester

CH16302 - Mechanics of Solids for Chemical Engineering

(Regulation 2016)

Time: Three hours Maximum : 80 Marks

Answer **ALL** questions

PART A - (8 X 2 = 16 marks)

1. The curve for Linear stress strain
   a. Load α displacement
   b. Load α (1/displacement)
   c. Load = (displacement)^2
   D. None
2. The maximum deflection occur at a distance of _____ m from the fixed end of a propped cantilever of span 'L' m subjected to a uniformly distributed load of 'w' kN per unit length
   a. 0.33 L
   b. 0.5L
   c. O
   d. L
3. The slope at the both ends of a beam of length l is simply supported over its both ends. If it is carrying a UDL of w per unit length.
   a. $Wl^3/24EI$
   b. $Wl^4/24EI$
   c. $5Wl^2/24EI$
   d. $5Wl^3/24EI$
4. The maximum shear stress occur for an inverted T section is subjected to a shear force F.
   a. Top
   b. Neutral axis
   c. Junction of web and flange
   d. None
5. Define bulk modulus and its significance
6. Write the relation between loading, shear force and bending moment?
7. What are the criteria for choosing for conjugate beam method?
8. What is the torque developed in the hollow shaft having outer diameter of 50mm with inner diameter 40mm? Take shear stress is 0.4N/mm^2

PART B - (4 X16 = 64 marks)

09. (a) (i) In an experiment, a steel specimen of 13 mm diameter was found to elongate 0.2 mm in a 200 mm gauge length when it was subjected to a tensile force of 26.8 kN. If the specimen was tested within the elastic range, what is the value of Young's modulus for the steel specimen? **(8)**

(ii) Derive the relation between Young's modulus and poison ratio. **(8)**

(OR)

(b) A composite bar made up of aluminium and steel is held between two supports as shown. The bars are stress free at a temperature of 40^0C. What will be the stresses in the two bars when the temperature of the bar is 20^0C if (i) the supports are non-yielding, and (ii) the supports come nearer to each other by 0.1 mm. It can be assumed that the change in temperature is uniform all along the length of the bar. **(16)**

Take: E_s= 210GN/mm^2, E_a=74 GN/mm^2, α_s= 11.7 x 10^{-6} per ^{0}C and α_a=23.4 x 10^{-6} per ^{0}C.

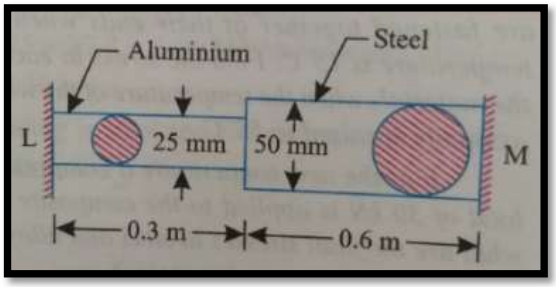

10. (a) Draw the shear force and bending moment diagram for the cantilever beam carrying UDL of length 2m **(16)**

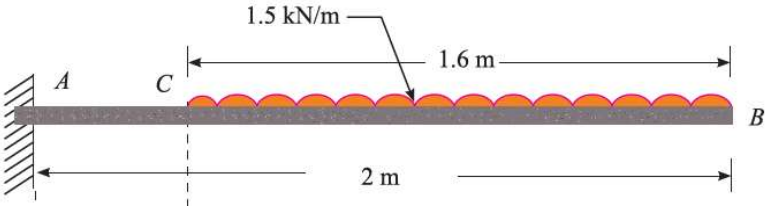

(OR)

(b) Find the magnitude for shear force and Bending Moment, of simply supported beam carrying UDL in the left end. **(16)**

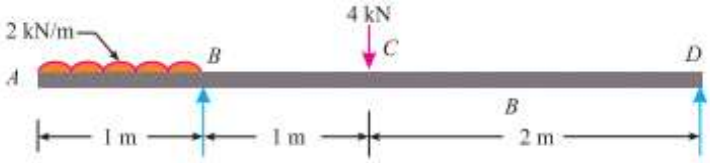

11. (a) Calculate the slope and deflection of cantilever beam of length 'l'm carrying UDL of w kN/m by conjugate beam method **(16)**

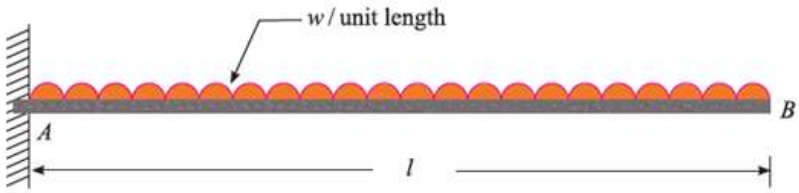

(OR)

(b) Calculate the deflections at C & D in the below figure using Macaulay's method. **(16)**

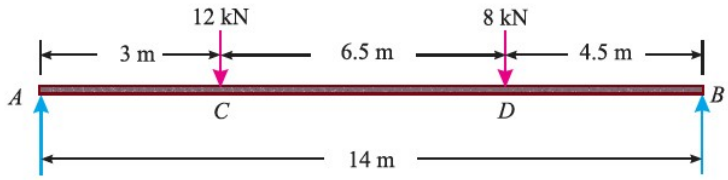

12. (a) An I section beam 200mm x160mm has a web thickness of 12mm and a flange thickness of 22mm. If the shear force acting on a particular section is 200kN, sketch the shear stress distribution across the section. **(16)**

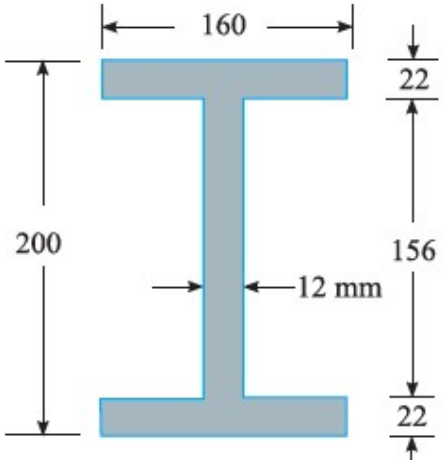

(OR)

(b) (i) Derive an expression for shear stress in shaft subjected to torsion. **(8)**

(ii) Derive an expression for torque in terms of polar moment and inertia **(8)**