B.E./B.TECH. Degree Examination, December 2020

Fourth Semester

EE16405- CONTROL SYSTEMS

(Regulation 2016)

Note: Additional Semilog sheet and polar plot have to be provided

Time: Three hours Maximum: 80 Marks

Answer **ALL** questions

PART A - (8 X 2 = 16 marks)

1. What are the components of feedback control system?
2. State the null position in synchro.
3. Differentiate the type and order of the system and find the same for given system $\frac{K}{s^2(s+2)(s+5)}$
4. Define corner frequency.
5. The open-loop DC gain of a unity negative feedback system with closed-loop transfer function $\frac{s+4}{s^2+7s+13}$ **is**

   a.)4/13 b.)4/9 c.)4 d.)13
6. The steady state error of a feedback control system with an acceleration input becomes finite in a

   a.)Type 0 system b.)Type 1 system c.)Type 2 system d.) Type 3 system
7. An n x n matrix is said to be non-singular if the rank of the matrix r is

   a.) r $\neq$ n b.) r = n c.) r = n/2 d.) r = 2n
8. Gain margin and Phase margin must be positive

   a.)Stable b.)Unstable c.)Relative stability d.)Marginally stable

PART B - (4 X16 = 64 marks)

09. (a) Determine the transfer function C1/R1 and C2/R1 for the system shown in figure. **(16)**

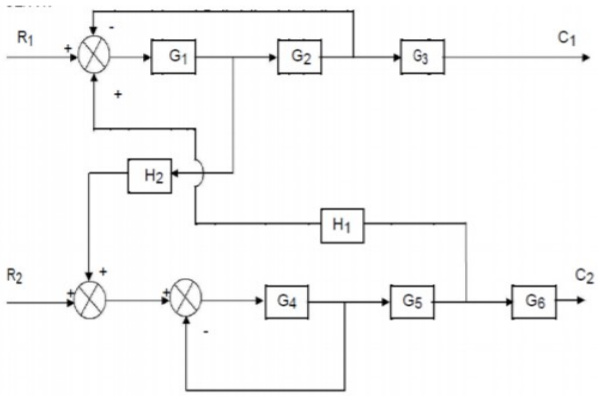

(OR)

(b) Find the overall gain of the system whose signal flow graph is shown in Figure. **(16)**

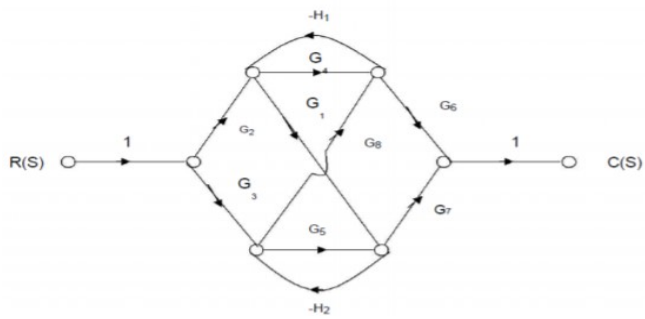

10. (a) Obtain the state model for the given mechanical translational system. **(16)**

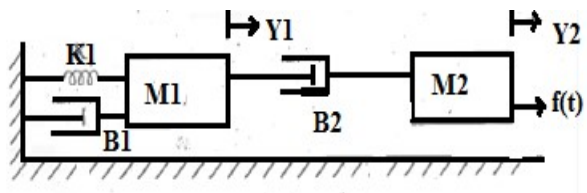

(OR)

(b) Sketch the root locus for the unity feedback system whose open loop transfer function is $G(s)=\dfrac{K}{s(s^2+4s+13)}$ **(16)**

11. (a) Draw the Bode plot and find Gain margin and Phase margin for the open loop transfer function of an unity feedback system is given by $G(s)=\dfrac{10}{s(1+0.4s)(1+0.1s)}$ **(16)**

(OR)

(b) Sketch the polar plot and find gain & phase margin for the open loop transfer function of a unity feedback system given by $G(s)=\dfrac{1}{s^2(1+s)(1+2s)}$ **(16)**

12. (a) Explain in steps about the Lag-Lead compensator design. **(16)**

(OR)

(b) A unity feedback system has an open loop transfer function $G(s)=\dfrac{K}{s(s+1)(s+4)}$ .Design a suitable lag compensator to satisfy the following specifications. **(16)**

(i)Damping ratio $\zeta = 0.5$

(ii)Settling time t_s =10 sec

(iii)Velocity error constant $K_v \geq 5$ rad/sec