B.E./B.TECH. DEGREE EXAMINATION, DECEMBER 2020

Fifth Semester

MR16001-MECHANICS OF MARINE MACHINES

(Regulation 2016)

Time: Three hours Maximum : 80 Marks

Answer **ALL** questions

PART A - (8 X 2 = 16 marks)

1. A combination of kinematic pairs, joined in such a way that the relative motion between the links is completely constrained, is called a
   a) structure b) mechanism c) kinematic chain d) inversion
2. Which of the following is not true about gears?
   a) Positive drive b) Constant velocity ratio c) Transmit large power d) Bulky construction
3. A hunting governor is
   a) more stable b) less sensitive c) more sensitive d) none of the mentioned
4. The factor which affects the critical speed of a shaft is
   a) diameter of the disc b) span of the shaft c) eccentricity d) all of the mentioned
5. Explain the Rolling pair and Spherical pair with an example.
6. Can you group the reasons for avoiding interference?
7. State the importance of balancing.
8. In which vibrations, bending stresses are induced? How?

PART B - (4 X16 = 64 marks)

09. (a) In the mechanism shown in Fig.1, O and A are fixed. CD = 200mm, OA = 60mm, AC = 50mm and OB= 150mm. OAD=90^0. Determine the velocity of the slider D for counter clockwise rotation of OB at 80 rpm. (16)

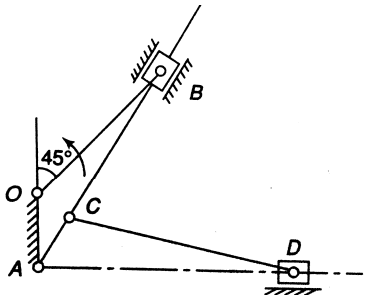

Fig.1

(OR)

(b) The turning moment diagram for a multi cylinder engine has been drawn to a scale of 1 mm =6 N-m vertically and 1 mm = 2.4° horizontally. The intercepted areas between output torque curve and mean resistance line taken in order from one end are 305, 710, 50, 350, 980, 275 mm^2. The mass of rotating parts is 40 kg at a radius of gyration of140mm. Calculate the coefficient of fluctuation of speed if the speed of the engine is 1500 rpm. (16)

10. (a) The following data refer to two meshing gears having 20^0 involute teeth. Number of teeth on gear wheel: 52, Number of teeth on PINION: 20, Speed of pinion: 360 rpm, Module: 8mm. If the addendum of each gear is such that the path of approach and path of recess are half of their maximum possible values, determine the addendum for the gear and pinion and the length of arc of contact. **(16)**

(OR)

(b) Two 20^0 involute spur gears having a velocity ratio of 2.5 mesh externally. The module is 4mm and addendum is 1.23 module. The pinion rotates at 150 rpm. Find (i) The number of teeth on the pinion to avoid interference on it and the corresponding number of teeth on the wheel (ii) The number of pairs of teeth in contact. **(16)**

11. (a) A Hartnell governor having a central sleeve spring and two right-angled bell crank levers moves between 290 rpm. and 310 rpm. for a sleeve lift of 15 mm. The sleeve arms and the ball arms are 80 mm and 120 mm respectively. The levers are pivoted at 120 mm from the governor axis and mass of each ball is 2.5 kg. The ball arms are parallel to the governor axis at the lowest equilibrium speed. Determine 1. Loads on the spring at the lowest and the highest equilibrium speeds, and 2. Stiffness of the spring. **(16)**

(OR)

(b) The moment of inertia of an airplane is $20 kg.m^2$ and the speed of rotation is 1000 rpm clock wise when viewed from front. The speed of the flight is 200kmph. Find the gyroscopic reaction of the airplane when it makes a left handed turn on a path of 150m radius. **(16)**

12. (a) Four masses A, B, C and D are completely balanced. Masses C and D make angles of 90^0 and 210^0 respectively with B in the same sense. The planes containing B and C are 300mm apart. Masses A, B, C and D are assumed to be concentrated at radii of 360, 480, 240 and 300mm respectively. The Masses B, C and D are 15kg, 25kg and 20kg respectively. Find (i) Mass A and its angular position (ii) Positions of planes A and D. **(16)**

(OR)

(b) In a single degree damped vibrating system, the suspended mass of 4kg makes 24 oscillations in 20 seconds. The amplitude decreases to 0.3 of the initial value after 4 oscillations. Find the stiffness of the spring, logarithmic decrement, damping factor and damping coefficient. **(16)**