Q. Code:261732

**Reg. No.** | | | | | | | | | |

# M.E. / M.TECH. DEGREE EXAMINATIONS, MAY 2019

Second Semester

## MS18205 – INDUSTRIAL ROBOTICS

(*Mechatronics*)

## (Regulation 2018)

**Time: Three Hours** **Maximum : 100 Marks**

Answer **ALL** questions

**PART A - (10 X 2 = 20 Marks)**

1. Name important specification of an industrial robot.
2. Define payload capacity of a robot.
3. List the types of drives used in robots.
4. List any four important factors to be considered in the selection and design of grippers.
5. What is meant by sniff sensor?
6. State the application of Proximity sensor.
7. Define interlocks in robots.
8. What are three levels of safety sensors used in robot?
9. How AI is connected with robotics?
10. What are the advantages of KBES?

**PART B - (5 X16 = 80 Marks)**

11. (a) (i) Discuss about the anatomy of an industrial robots with neat sketch. **(8)**

(ii) Write the homogeneous transform matrix for a rotation of 90° about the z-axis, followed by a translation of (3, 7, 9). **(8)**

**(OR)**

(b) (i) Consider the forward transformation of the two-joint manipulator. Given that the length of joint 1, $L_1$=10mm the length of joint 2, $L_2$=15mm, the angle $\theta_1$ =20 and the angle $\theta_2$ =30°, compute the coordinate position (x and y coordinates) for the end of the arm Pw. **(8)**

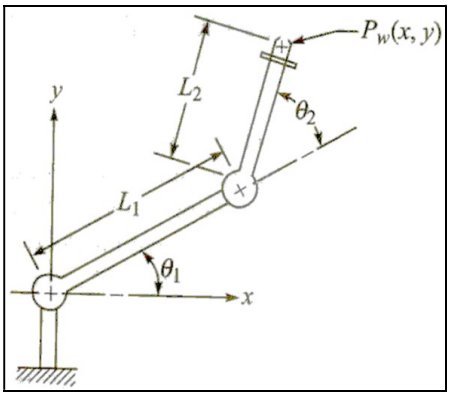


(ii) Discuss about the types of joints involved to make robot movement. **(8)**

12. (a) Explain the working principle and construction of stepper motor. **(16)**

**(OR)**

(b) List the type of end effector and illustrate with neat sketches. **(16)**

13. (a) Explain the principle of following sensors and also mention how they used in robots. **(16)**

1. Piezo electric sensor.
2. Inductive Proximity sensor.
3. Touch sensor.
4. Ultrasonic sensor.

**(OR)**

(b) Explain the step by step procedure of machine vision technique with neat sketch. **(16)**

14. (a) (i) Describe the design of robot cell layouts in detail. **(8)**

(ii) Discuss about the machine interface technique in detail. **(8)**

**(OR)**

(b) (i) Discuss about any eight applications of industrial robot briefly. **(8)**

(ii) Explain the different safety consideration for robot operation. **(8)**

15. (a) Write in detail on structure of AI and Problem reduction technique. **(16)**

**(OR)**

(b) Write the VAL offline robot program for straight line welding operation. Also, draw your assumed welding environment. **(16)**