B.E/B.TECH Degree Examination, December 2020

Third Semester

EC18303-CIRCUIT THEORY

(Regulation 2018)

Time: Three hours Maximum : 80 Marks

Answer **ALL** questions

PART A - (8 X 2 = 16 marks)

1. A network contains linear resistors and ideal voltage source. If values of all the resistors are doubled, then the voltage across each resistor is
   (a) halved
   (b) doubled
   (c) increased by four times
   (d) not changed
2. The average power delivered to an impedance (4 - j3) Ω by a current 5cos(100πt+100)A is
   (a) 44.2 W
   (b) 25 W
   (c) 50 W
   (d) 100 W
3. A series RLC circuit has a resonance frequency of 1 kHz and Quality factor Q = 100. If each R, L and C is doubled from its original value, the new quality factor of the circuit is
   (a) 25
   (b) 50
   (c) 100
   (d) 200
4. The graph of a network has 8 nodes and 5 independent loops. The number of branches of the graph is
   (a) 12
   (b) 13
   (c) 14
   (d) 15
5. For the given circuit, determine the current i_4.

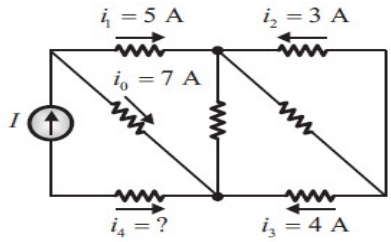

6. For the given circuit, determine the current i_L.

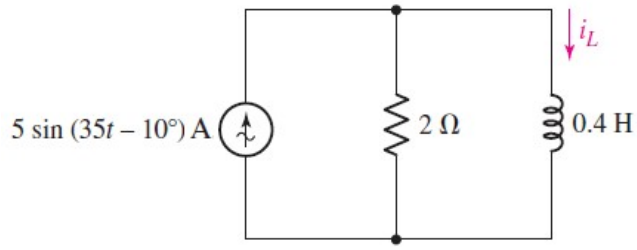

7. Draw the equivalent circuit for the given Z parameter matrix

$$[z] = \begin{bmatrix} 3 & 5 \\ 5 & 6 \end{bmatrix} \Omega$$

8. Determine time constant (τ) for the given RL circuit.

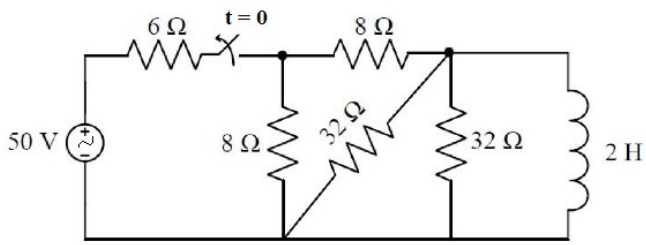

PART B - (4 X16 = 64 marks)

09. (a) (i) For the given circuit, use nodal analysis to determine all the node voltages. **(10)**

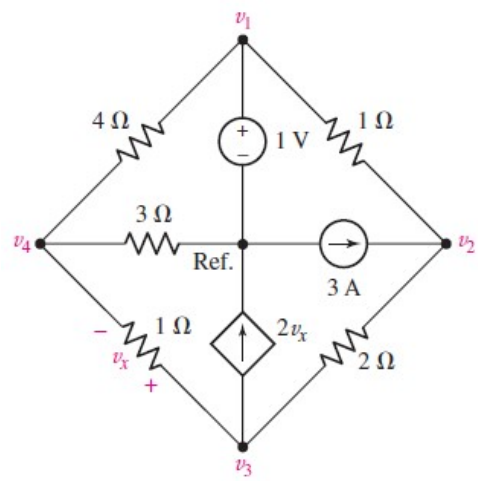

(ii) If $V_A - V_B = 6V$, then find $V_C - V_D$. Also find the power delivered by 2A current source. **(6)**

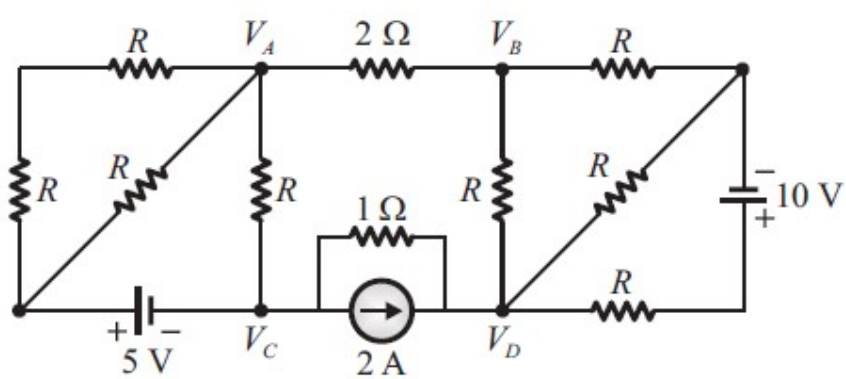

(OR)

(b) (i) For the given circuit, use mesh analysis to determine the power absorbed by the 10Ω resistor. **(10)**

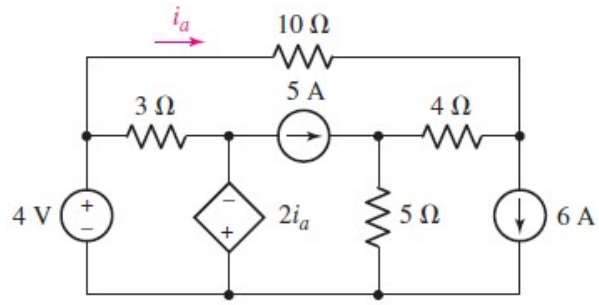

(ii) Determine the voltage e_0. **(6)**

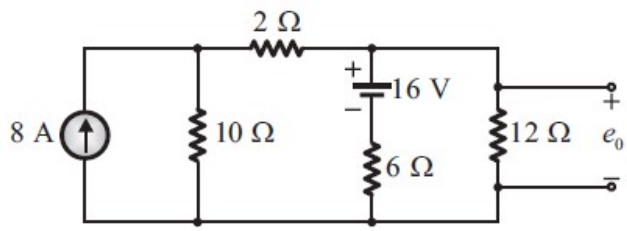

10. (a) (i) For the given power triangle, determine the complex power **S** (in polar form) and the Power Factor. **(4)**

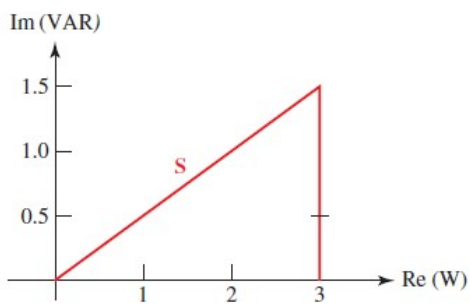

(ii) In the circuit shown below (*a*) find values for $\mathbf{I}_1$, $\mathbf{I}_2$ and $\mathbf{I}_3$. (*b*) Show $\mathbf{V}_s$, $\mathbf{I}_1$, $\mathbf{I}_2$ and $\mathbf{I}_3$ on a phasor (*c*) Use the phasor diagram to determine the angle by which I_s lags I_1, I_2 and I_3. **(12)**

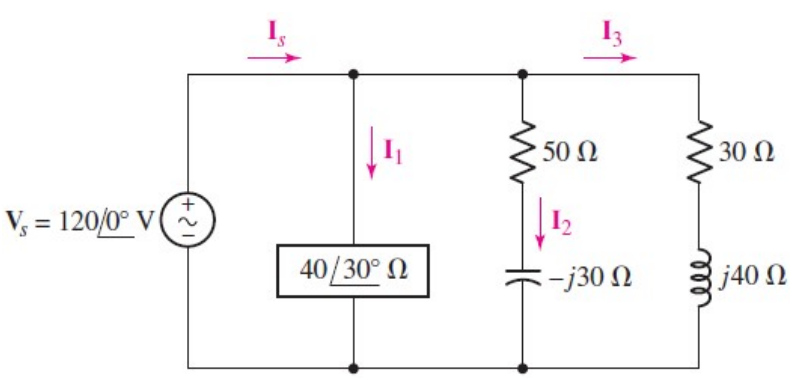

(OR)

(b) (i) For the given circuit, determine the voltage across 1Ω resistor v_1.

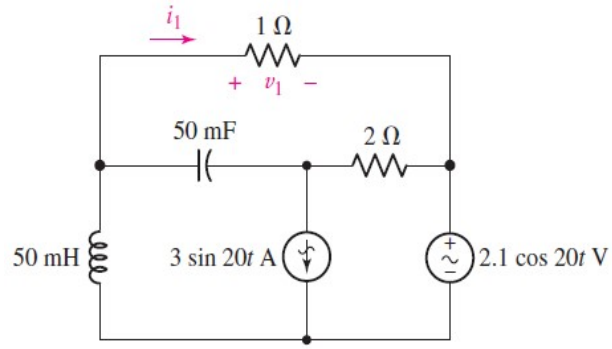

(12)

(ii) For the given circuit, determine the average power absorbed by 1Ω resistor.

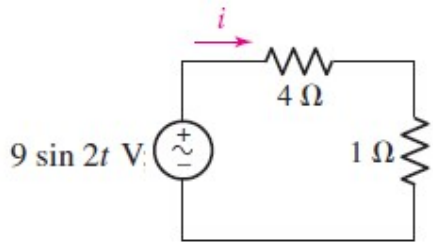

(4)

11. (a) (i) A Series RLC circuit is operated at a frequency different from its resonant frequency. The operating frequency is such that the current leads the supply voltage. The magnitude of current is half the value at resonance. If the values of R, Land C are 1Ω, 1H and 1F respectively. Determine its operating angular frequency (in rad/sec). **(8)**

(ii) Determine the resonant frequency for the given circuit.

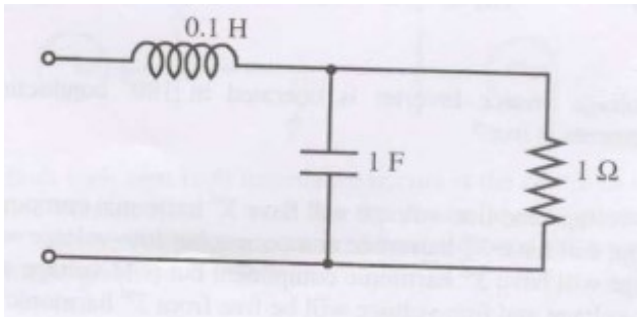

(8)

(OR)

(b) (i) Determine the mesh current I_1 and I_2.

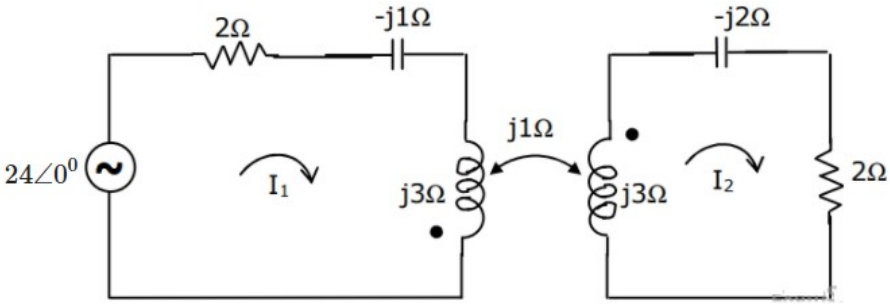

(10)

(ii) Determine the equivalent inductance for the coupled circuit shown below.

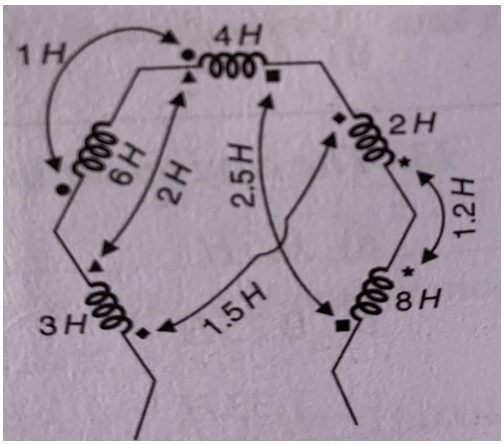

(6)

12. (a) The switch in the circuit shown was on position '1' for a long time, and is moved to position '2' at time t = 0. Determine the voltage across $v_c(t)$.

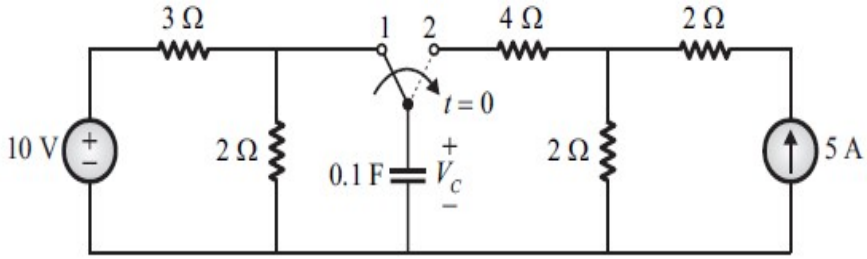

(16)

(OR)

(b) (i) For the given oriented graph, determine the incidence matrix (A), cut-set matrix (C) and also express the branch voltage in terms of twig voltage.

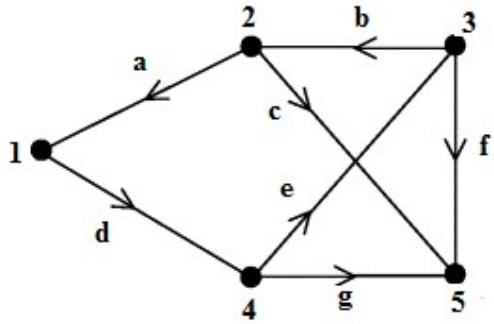

(8)

(ii) In a linear two-port network, when 10 V is applied to Port 1, a current of 4 A flows through Port 2 when it is short-circuited. When 5 V is applied to Port 1, a current of 1.25 A flows through a 1 Ω resistance connected across Port 2. When 3 V is applied to Port 1, determine the current (in Ampere) through a 2 Ω resistance connected across Port 2. **(8)**